

L20

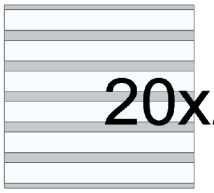

L20

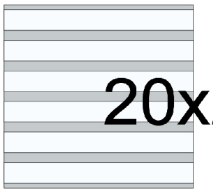

L20

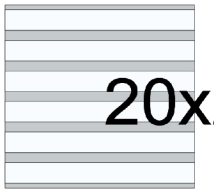

L20



L40



L40



L40



L40



L60



L60



L60



L60



L80



L80



L80



L80



L100



L100



L100



L100



L120



L120

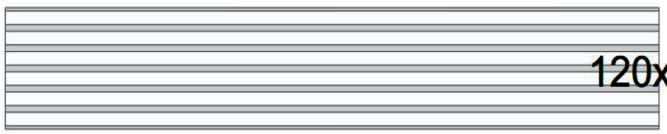

L120

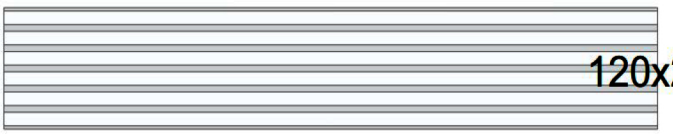

L120



S45-20



S45-20



S45-20



S45-20

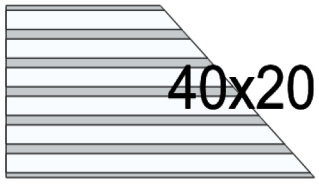

S45-40

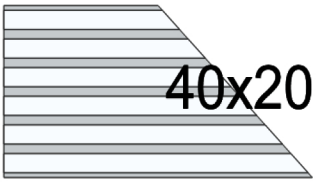

S45-40

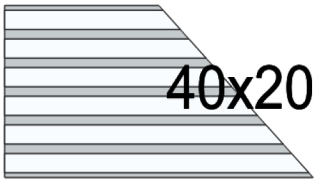

S45-40

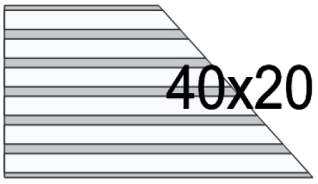

S45-40

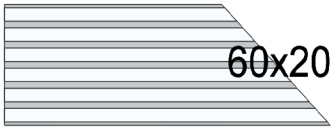

S45-60

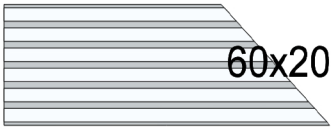

S45-60

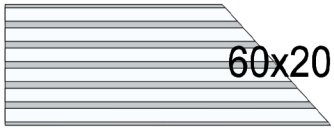

S45-60

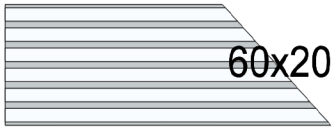

S45-60

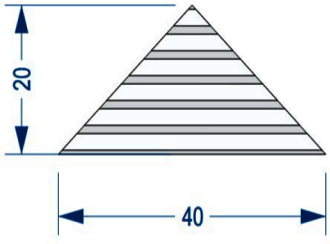

D45-40

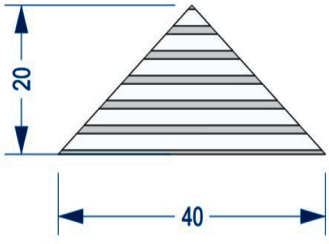

D45-40

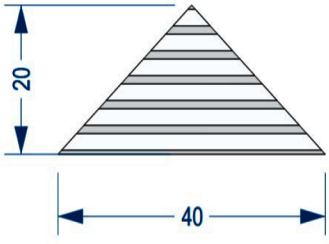

D45-40

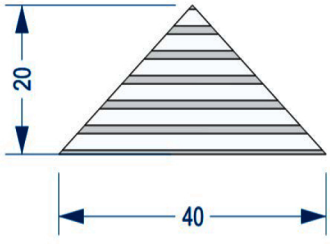

D45-40

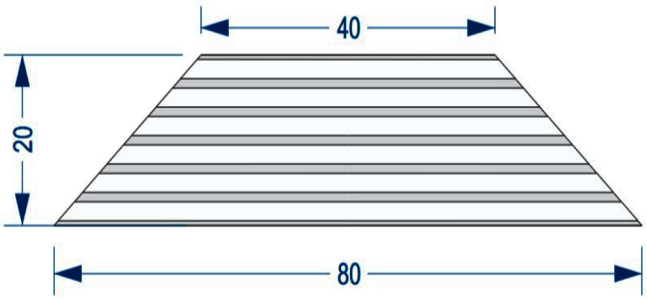

D45-80

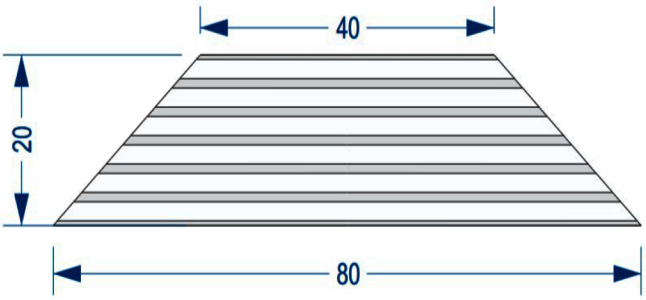

D45-80

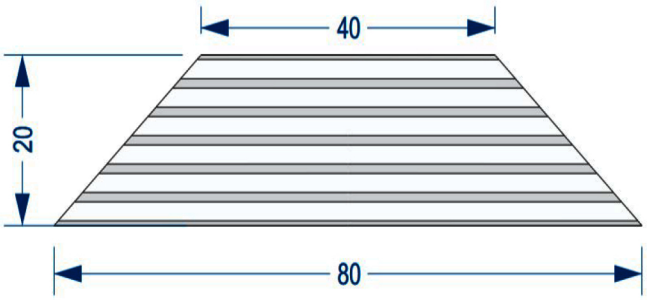

D45-80

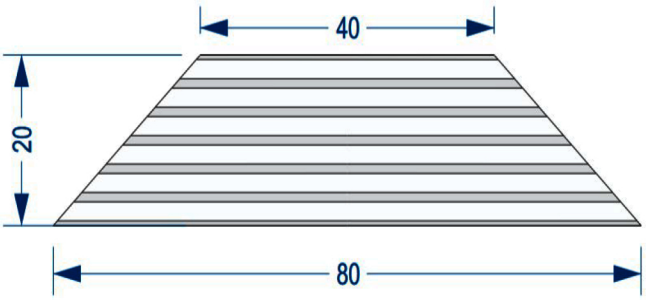

D45-80